Protect-All® Flooring

DETAIL FL1050

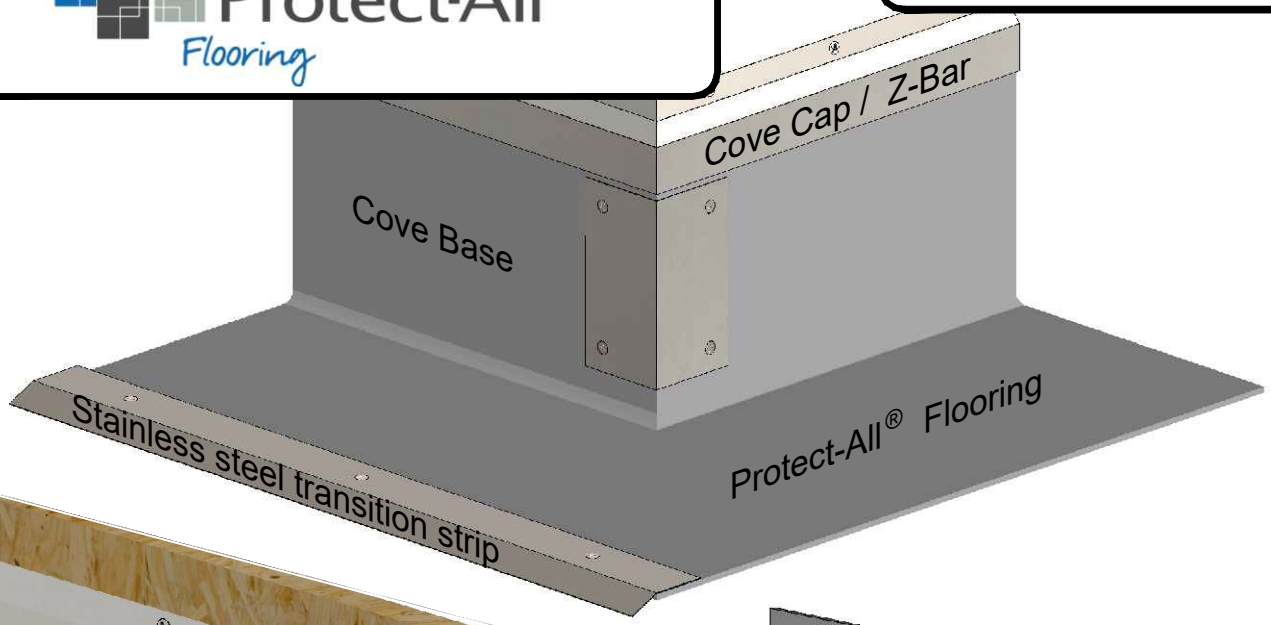

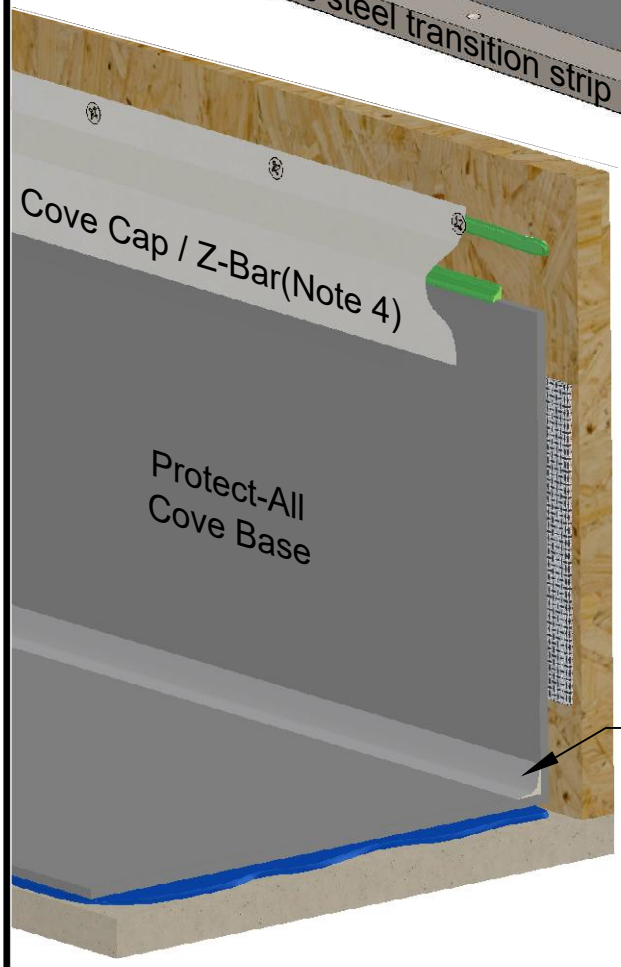

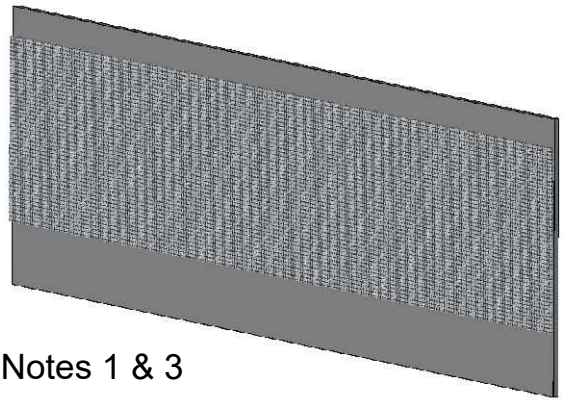

Notes 1 & 3

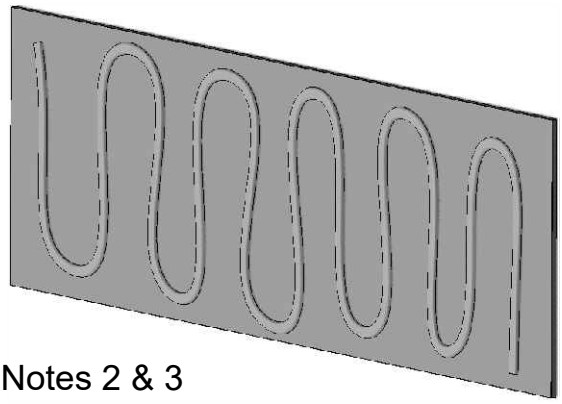

Notes 2 & 3

Note 1: Adhere the base to the wall using a 3 in. (76 mm) or 4 in. (102 mm) band of acrylic, web-reinforced, two-sided tape.

Note 2: E6100 can also be used to glue cove base as you would with cove base adhesive, in an "S" pattern.

Note 3: Immediately hand roll the base to smooth and set the adhesive or help the tape transfer to the wall.

Note 4: Refer to Detail FL1020 for Cove Cap / Z-Bar installation instructions

REVISED: N/A	COVE BASE
PREVIOUS: 06/08/2026	GENERAL DETAIL
SCALE: NONE	PROTECT-ALL FLOORING